Rev	AWO #	Description	Date	Appr
-		RELEASED	7/20/16	

APPROVED: _____

DATE: _____ TITLE: _____

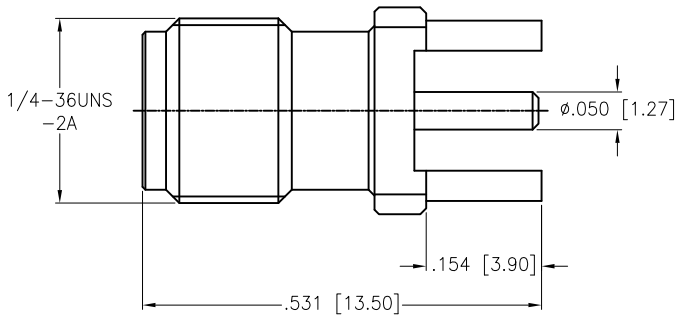

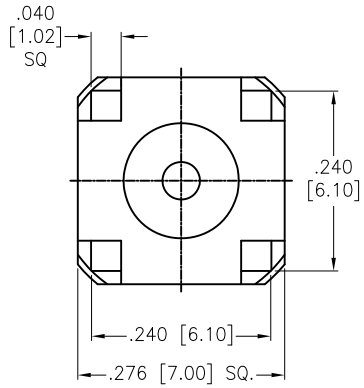

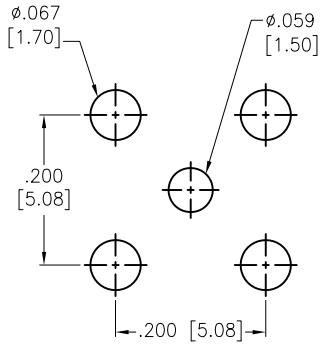

RECOMMENDED PCB LAYOUT

DESCRIPTION	MATERIAL	FINISH
BODY	BRASS	GOLD
INSULATOR	PTFE	WHITE
CENTER PIN	BRASS	GOLD

SPECIFICATIONS:

Electrical:
Nominal Impedance: 50 ohms
Frequency range: DC–18 GHz
Working voltage: 335 VOLTS max.
Proof voltage: 1,000 VOLTS
Temperature Rating:
Operating temperature: –65°C to +165°C
Environmental:
Lead free, RoHS compliant.

RoHS COMPLIANT

UNLESS OTHERWISE SPECIFIED
ALL DIMENSIONS ARE INCHES [MM]
TOLERANCES: EXCEPT AS NOTED

INCHES		HOLES	
.X	± .10	Ø.X	±.10
.XX	± .020	Ø.XX	±.015
.XXX	± .015	Ø.XXX	±.010

APPROVALS		DATE
DRAWN	AY	7/20/16
CHECKED	SY	7/20/16
APPROVED		

TITLE

RF CONNECTOR, SMA STR PCB JACK

SIZE	PART NO.	REV.
X	RF2-19A-T-00-50-G	-

REF: S00277T | SCALE: NTS | SHEET 1 OF 1